ALIGNMENT & METROLOGY UPDATE

Horst Friedsam
John Kyle
AMD teams

Collaboration meeting
3/21/2014

OUTLINE

Delivery Ring Control Network

Mock-up at ME7

Yokes

Poles

Vacuum Chamber & Trolley

DEBUNCHER RING UPDATE

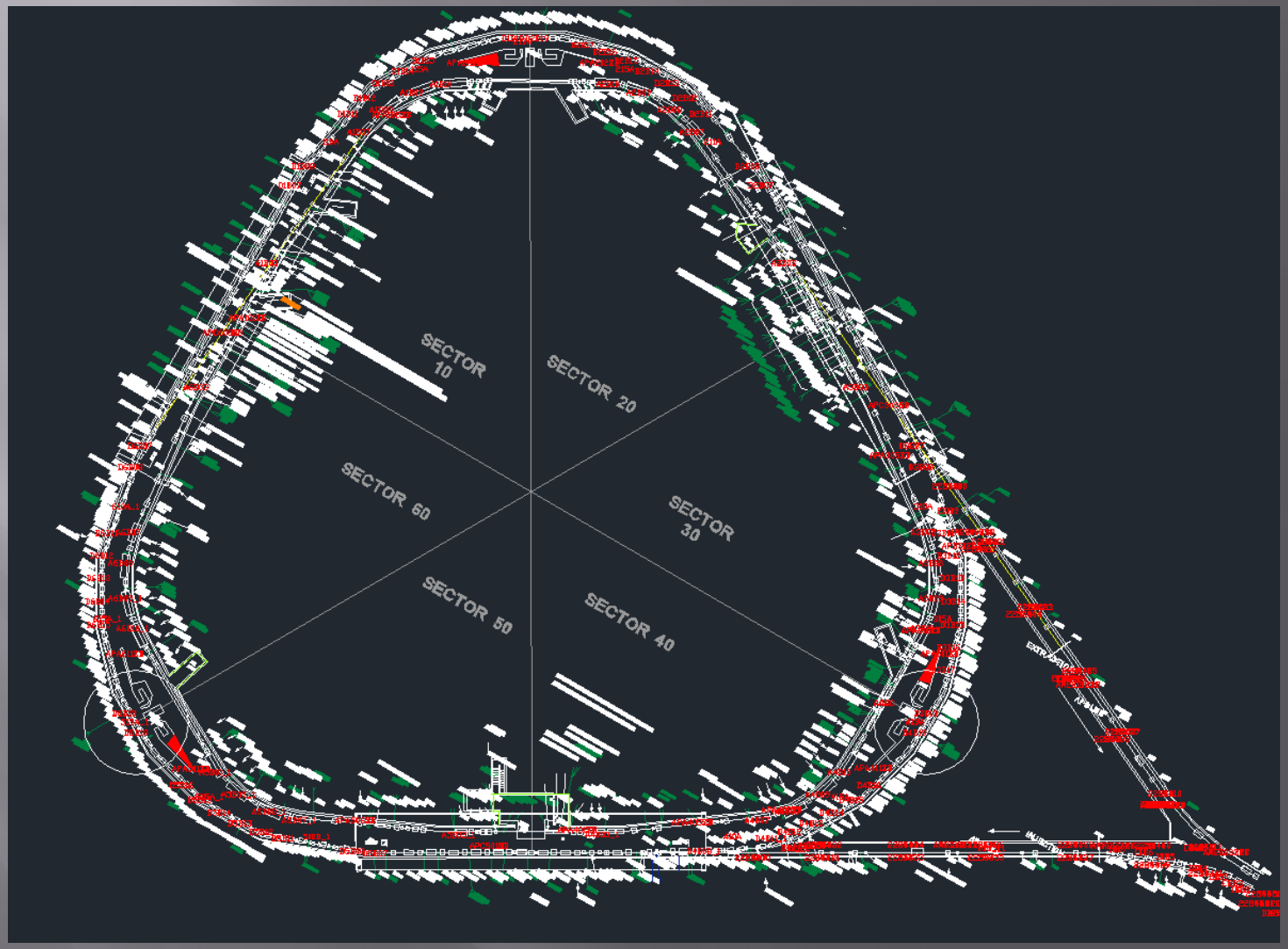

MOCK-UP AT ME7

CONSTRUCTING THE MOCK-UP AT ME7

Two yokes starting with yoke #A form a 60°sub-section of the ring ending in a long pole.

We did not have the right mix of yokes to create such a sub-section for the mock-up. So, yokes D and E straddle that boundary and we need to work backward as the pole face on yoke E lines up with the # 12 pole face .

The locations of the yokes determine the pole positions. So, we evaluated the distribution of the pole bolt holes.

The nominal clearance for positioning the poles is ± 1.5 mm which sets tight limits for the placement of the yokes.

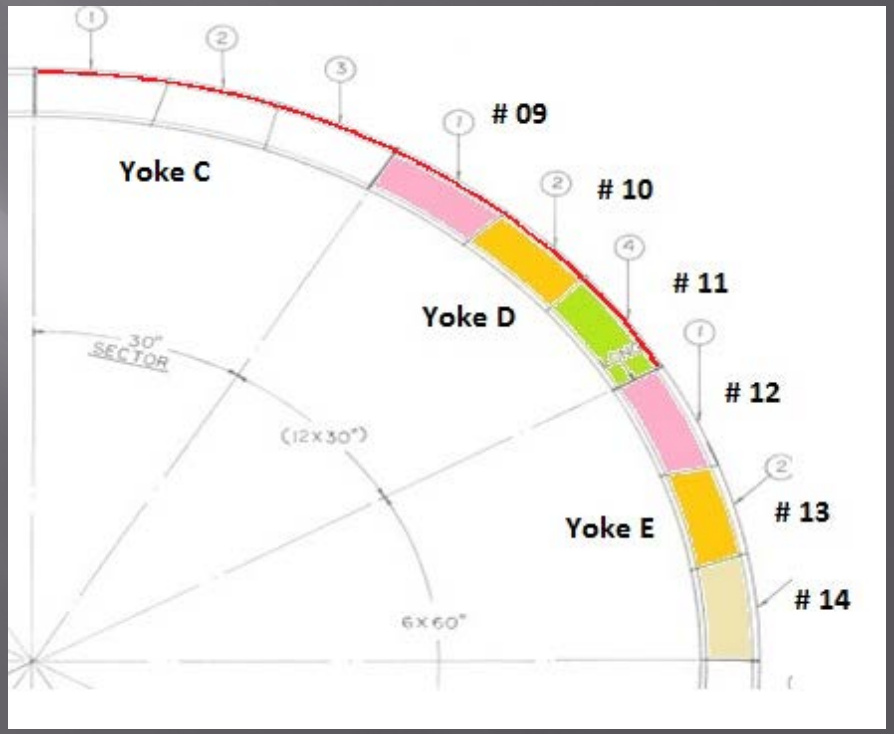

YOKE POSITION

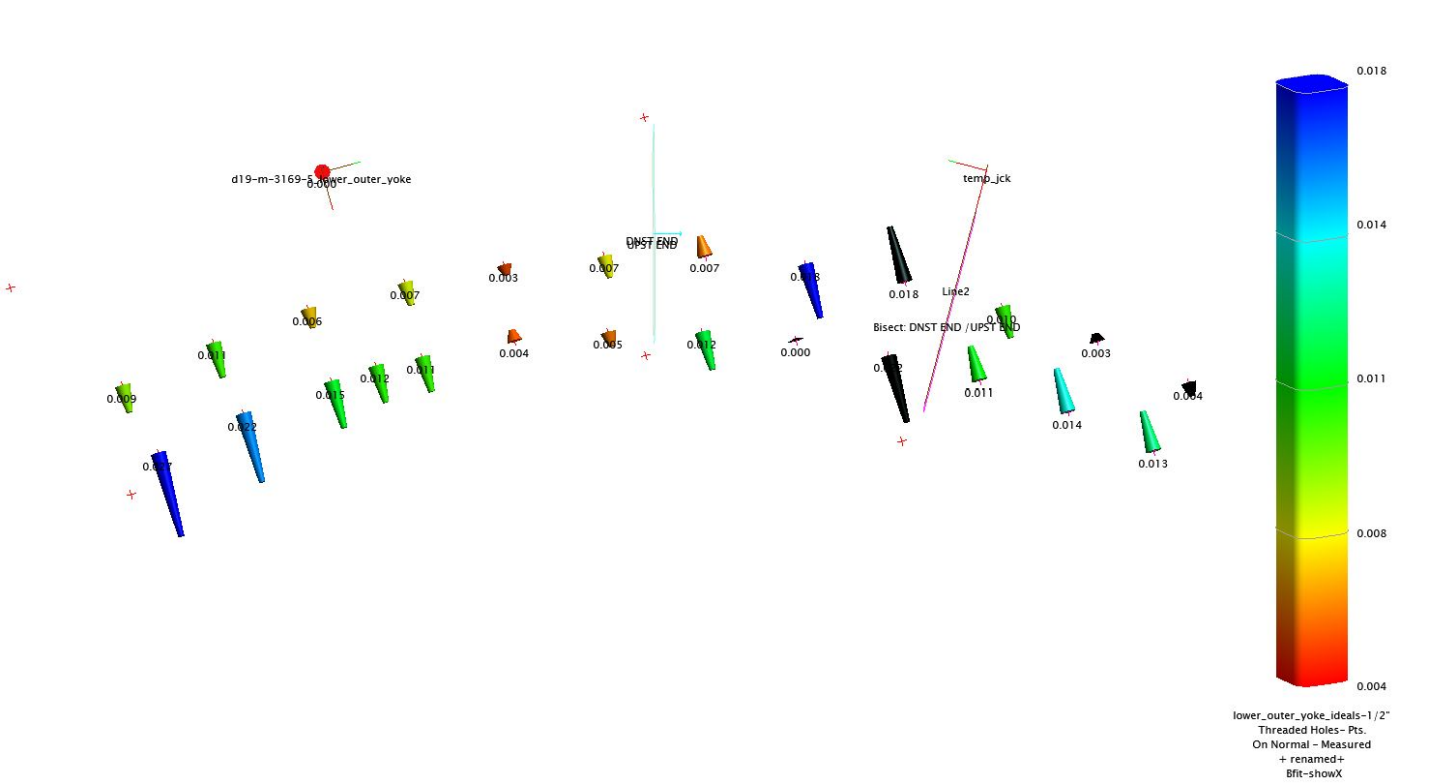

Yokes D and E best fit to their nominal locations

POLES DIMENSIONS

For the mock-up each pole is characterized dimensionally This provides a statistical sample of the quality of the poles after many years of operation.

All poles have been measured, some remain to be analyzed.

In particular we are interested in the pole flatness values.

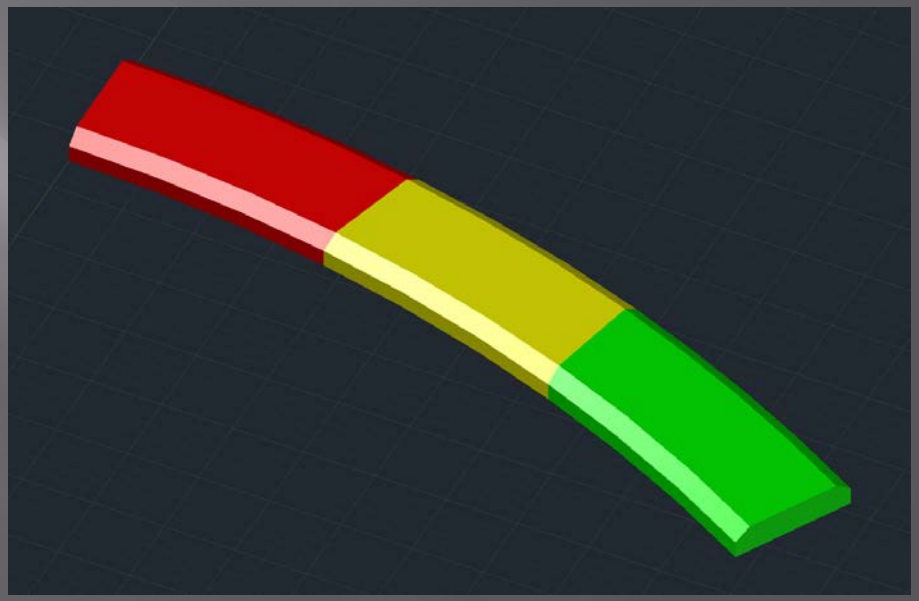

3D Solid model of the poles

POLE FLATNESS

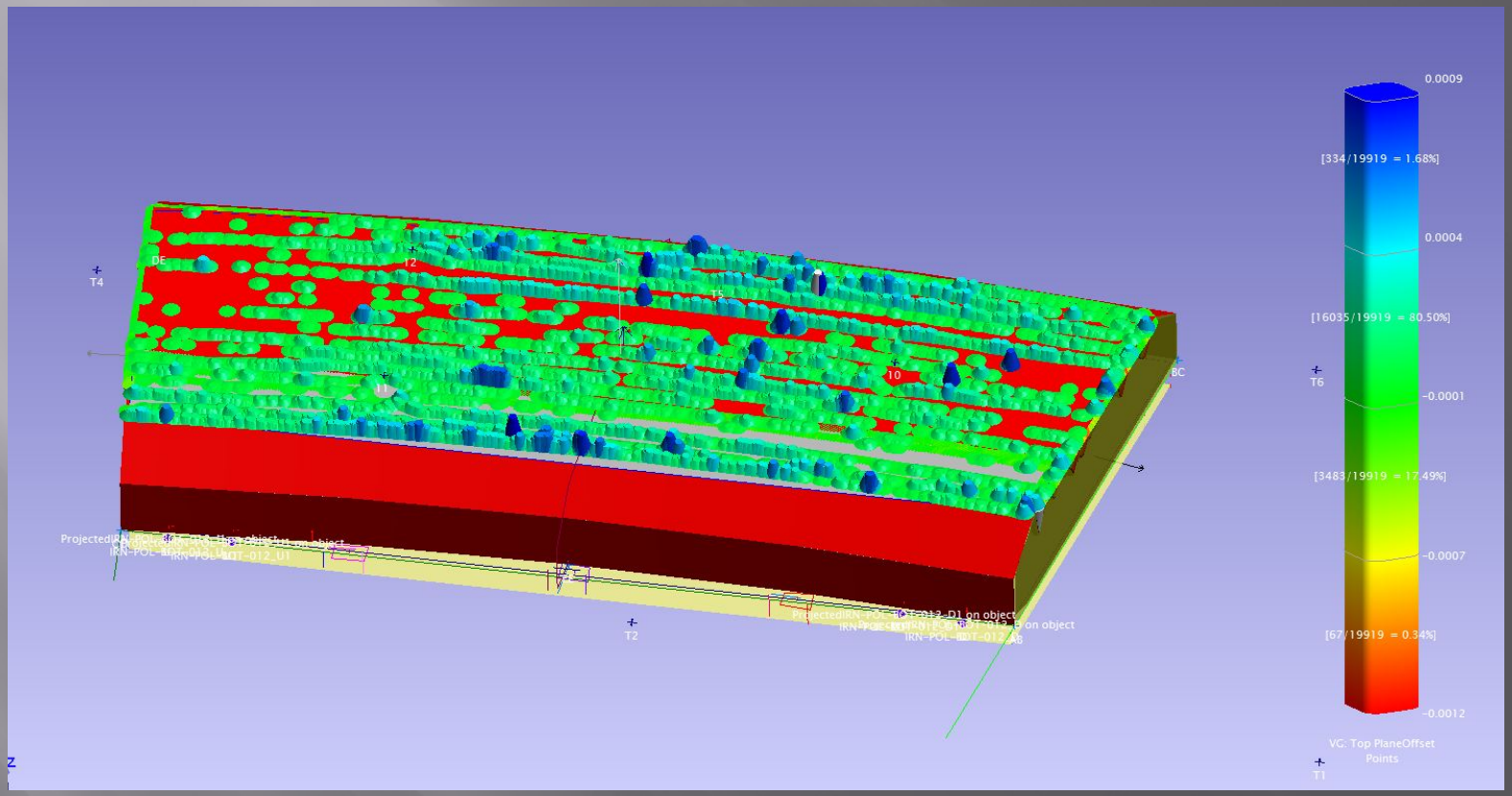

Bottom Pole # 12 best fit plane

POLE FLATNESS

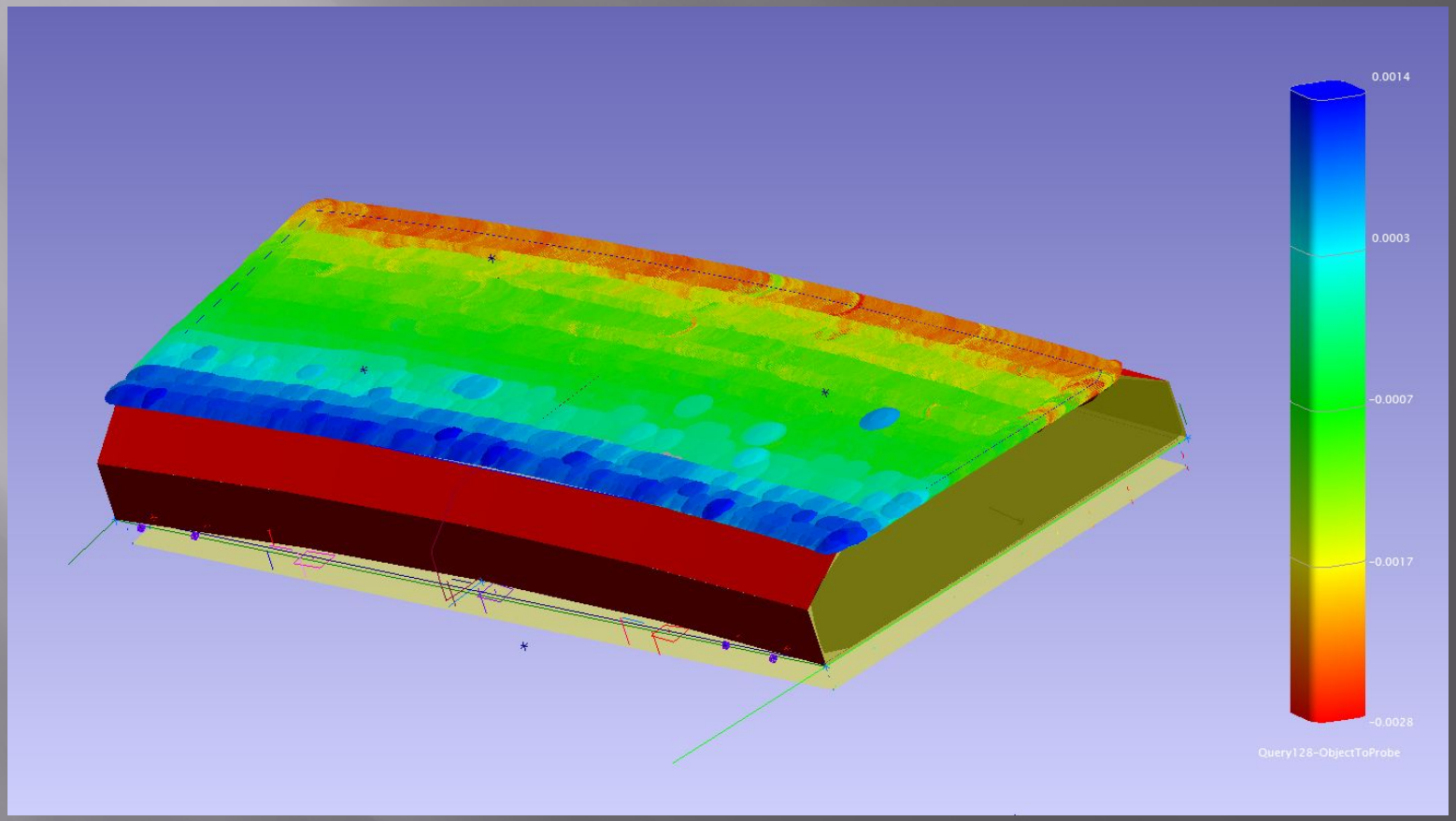

Bottom Pole # 12 wrt nominal

POLE FLATNESS SUMMARY

Pole #	Mean [µm]	RMS [µm]	Max [µm]	Min [µm]
Bottom Pole # 09	0.00	15.23	60.88	-65.35
Bottom Pole # 10	0.00	8.35	29.05	-27.90
Bottom Pole # 11	0.00	8.83	30.13	-28.43
Bottom Pole # 12	0.00	4.28	21.58	-28.90
Bottom Pole # 13	0.00	8.83	23.53	-26.70
Bottom Pole # 14	0.00	8.45	24.60	-21.55
Top Pole # 09				
Top Pole # 10	0.00	8.85	32.70	-32.15
Top Pole # 11	0.00	12.65	55.93	-66.68
Top Pole # 12				
Top Pole # 13	0.00	6.40	27.23	-21.93
Top Pole # 14				
Average	0.00	9.09	33.96	-35.51
StDev		3.20	14.33	17.61
According to Danby NIM paper 2001 the flatness tolerance was ± 25 µm with a ground surface finish of ± 0.8 µm				

RADIAL POLE DIMENSIONS

Pole #	IR [m]	RMS [µm]	Max [µm]	Min [µm]	OR [m]	RMS [µm]	Max [µm]	Min [µm]	d(OR-IR) [m]	RMS d(OR-IR) [µm]	delta to nominal [mm]	dIR nominal [mm]	dOR nominal [mm]
Bottom Pole # 09	6.83277	8.90	23.18	-49.88	7.38655	14.75	46.45	-45.13	0.554	17.227	-6.22	0.78	-5.44
Bottom Pole # 10	6.83161	16.83	40.13	-40.08	7.38995	16.15	63.55	-53.50	0.558	23.322	-1.65	-0.38	-2.04
Bottom Pole # 11	6.82918	11.40	49.18	-46.75	7.38958	15.90	57.63	-58.58	0.560	19.565	0.41	-2.81	-2.41
Bottom Pole # 12	6.82807	9.13	42.50	-37.20	7.39101	28.23	139.18	-135.05	0.563	29.663	2.95	-3.92	-0.97
Bottom Pole # 13	6.83213	15.38	32.95	-40.40	7.38954	21.20	48.45	-58.65	0.557	26.188	-2.58	0.14	-2.44
Bottom Pole # 14	6.83090	9.28	23.68	-27.20	7.39188	16.35	78.60	-54.43	0.561	18.798	0.99	-1.09	-0.10
Top Pole # 09													
Top Pole # 10	6.83661	20.15	72.90	-51.43	7.39033	16.68	46.80	-46.28	0.554	26.155	-6.27	4.62	-1.65
Top Pole # 11	6.82857	10.98	32.48	-32.63	7.38740	9.68	56.50	-29.40	0.559	14.631	-1.16	-3.42	-4.58
Top Pole # 12													
Top Pole # 13	6.82752	12.90	30.25	-69.43	7.38957	13.58	46.33	-39.38	0.562	18.727	2.06	-4.47	-2.42
Top Pole # 14													
Average	6.83082	12.77	38.58	-43.89	7.38953	16.94	64.83	-57.82	0.559	21.586	-1.28	-1.17	-2.45
StDev	0.00287	3.93	15.43	12.40	0.00166	5.20	29.82	30.49	0.003	4.972	3.32	2.87	1.66
Nominal	6.83199				7.39198						0.560		
According to Danby NIM paper 2001 the pole width was machined to													
0.56 m with a tolerance of ± 50 µm													

ANGULAR POLE DIMENSIONS

Pole #	Angle in [°]	Nominal	Delta [µrad]	Sum-Yoke	Nominal	Delta [µrad]
Bottom Pole # 09	16.9946	17	97			
Bottom Pole # 10	-4.0031	-4	56			
Bottom Pole # 11	16.9912	17	158	29.9827	30	311
Bottom Pole # 12	16.9972	17	50			
Bottom Pole # 13	-3.9987	-4	-23			
Bottom Pole # 14	16.9961	17	70	29.9946	30	97
Top Pole # 09						
Top Pole # 10	-3.9977	-4	-41			
Top Pole # 11	16.9845	17	279			
Top Pole # 12						
Top Pole # 13	-3.9975	-4	-45			
Top Pole # 14						
Average	16.9927		67			204
StDev			104			151

POLE THICKNESS

Pole Thickness	Min [m]	Avg [m]	Max [m]	Min-Nom [µm]	Avg-Nom [µm]	Max-Nom [µm]
Bottom Pole # 09	0.133038	0.133027	0.132984	38	27	-16
Bottom Pole # 10	0.133020	0.133007	0.132992	20	7	-8
Bottom Pole # 11	0.133167	0.133088	0.132931	167	88	-69
Bottom Pole # 12	0.133027	0.132954	0.132931	27	-46	-69
Bottom Pole # 13	0.133012	0.133005	0.132992	12	5	-8
Bottom Pole # 14	0.133132	0.133096	0.133012	132	96	12
Top Pole # 09						
Top Pole # 10	0.133124	0.133091	0.133017	124	91	17
Top Pole # 11	0.133033	0.133025	0.133017	32	25	17
Top Pole # 12						
Top Pole # 13	0.133010	0.132972	0.132944	10	-28	-56
Top Pole # 14						
Average	0.133062	0.133029	0.132980	62	29	-20
StDev	0.000061	0.000052	0.000036	61	52	36
According to Danby NIM paper 2001 the pole width was machined to						
0.133 m with a tolerance of ± 40 µm						

VACUUM CHAMBER

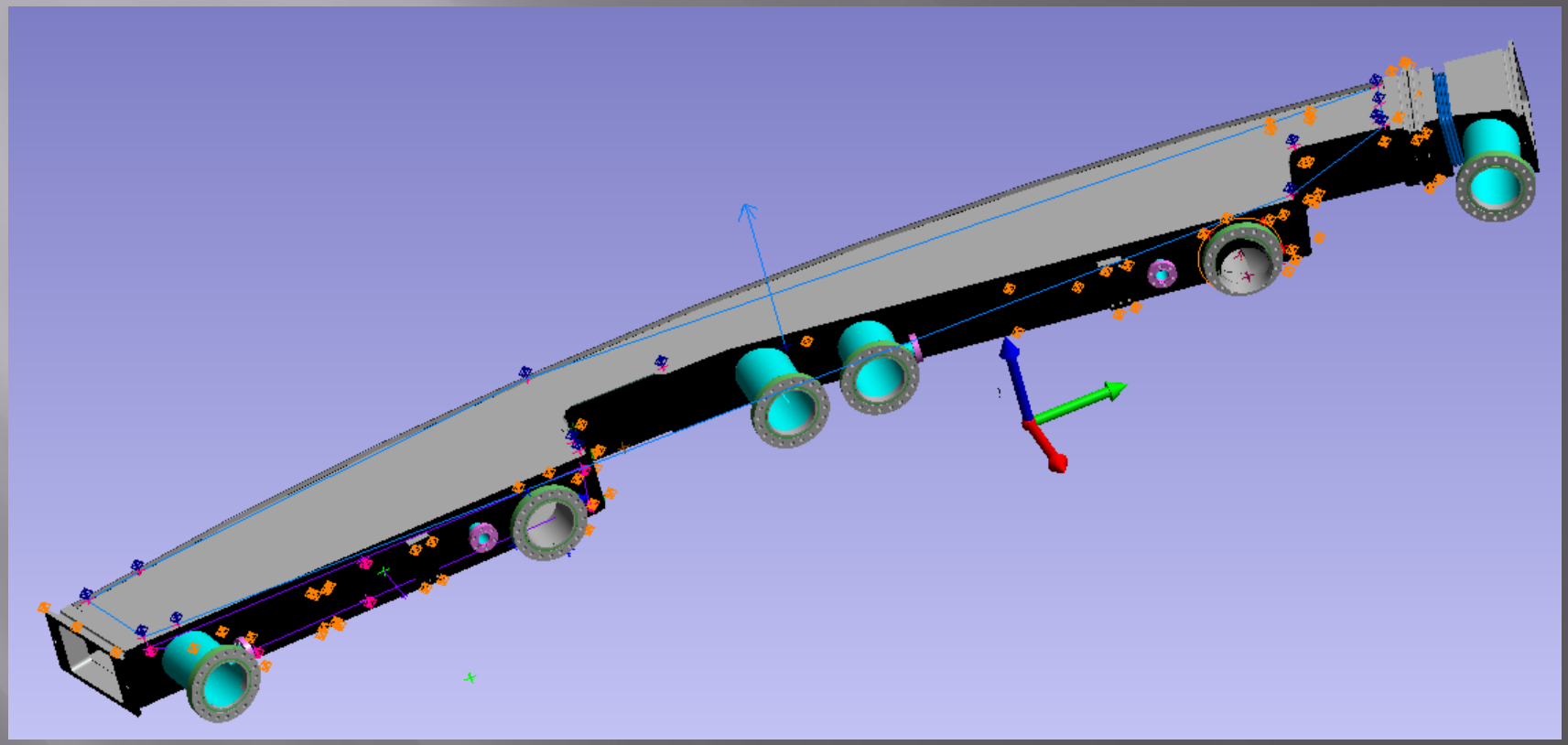

3D Model of the g-2 vacuum chamber

VACUUM CHAMBER AND TROLLEY

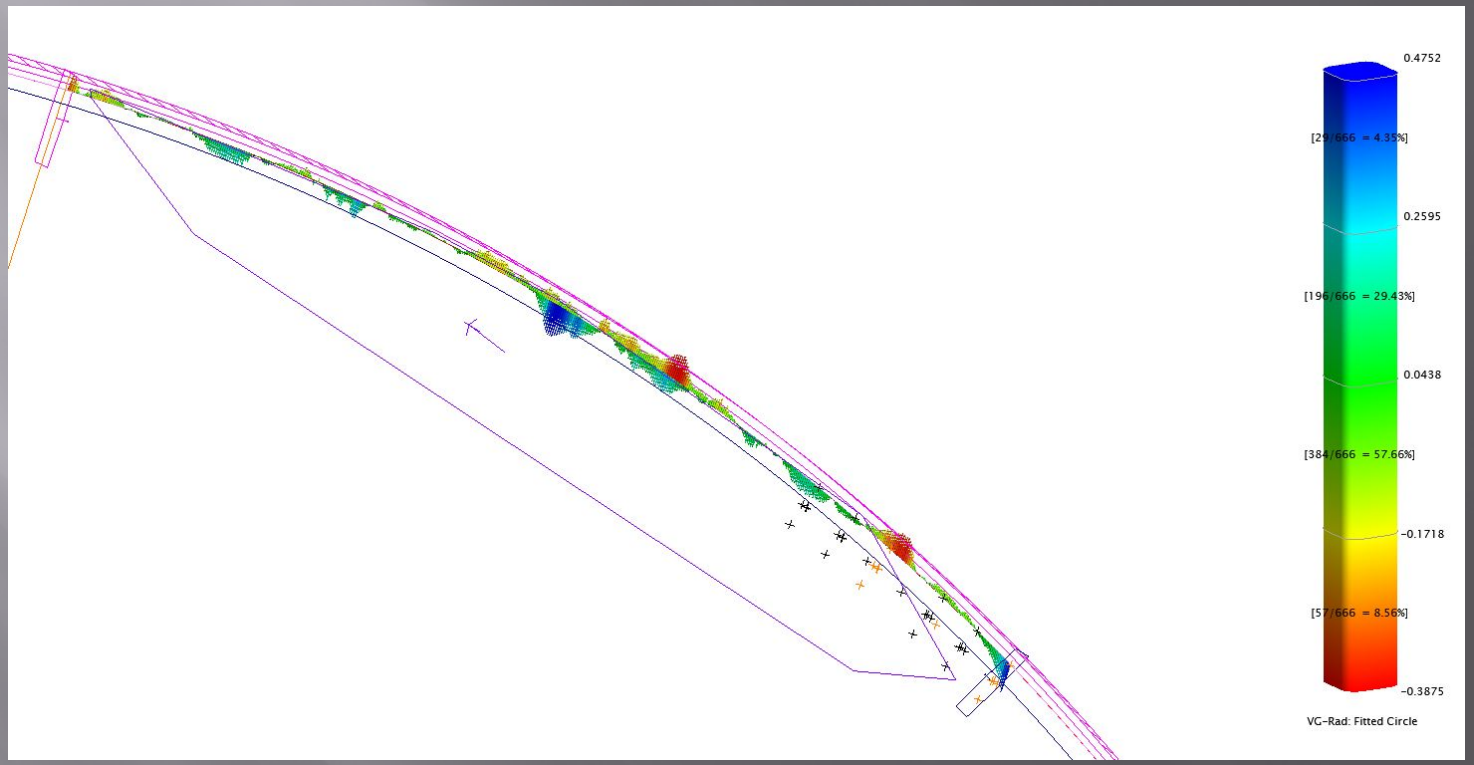

Trolley path inside the VC (radial deviations within ± 0.5 mm)

VACUUM CHAMBER AND TROLLEY

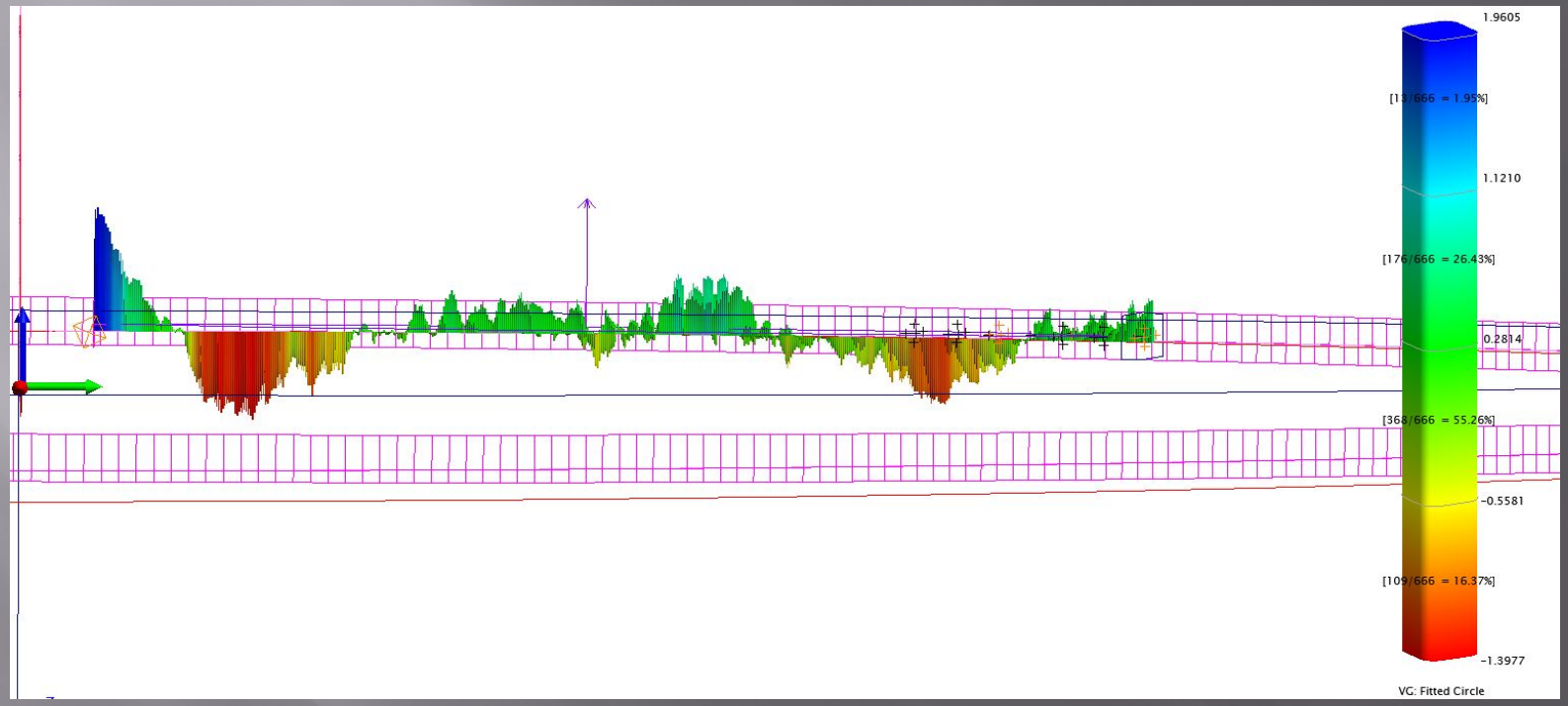

Trolley path inside the VC (vertical deviations within ± 2.0 mm)

THE HAMAR LASER SYSTEM

Range up to 30 m
Laser Plane Flattens
± 2.5 µrad limited by environmental conditions

The HAMAR laser system is currently in the procurement state.
The center monument supporting this system is a repurposed steel Brunson stand

THE KEYENCE LJ-V7000 LASER INSPECTION SYSTEM

A tool to measure the pole gaps

Measurement range 50 mm
Repeatability ± 0.4 µm

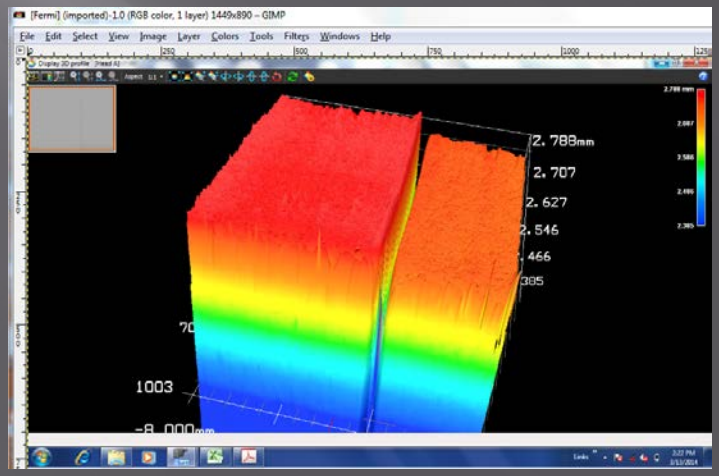

NEXT STEPS

- Continue measuring the Delivery Ring Control Network
- Referencing of beam line components
- Upon BO install the MC1 Control Network
- Measure and analyze the control network
- Continue the Mock-up installation
- Layout the injection beam line and ring support plate locations