Discussion of fast controls and readout system for g-2

E. Hazen

Dave's Slide
(rearranged)

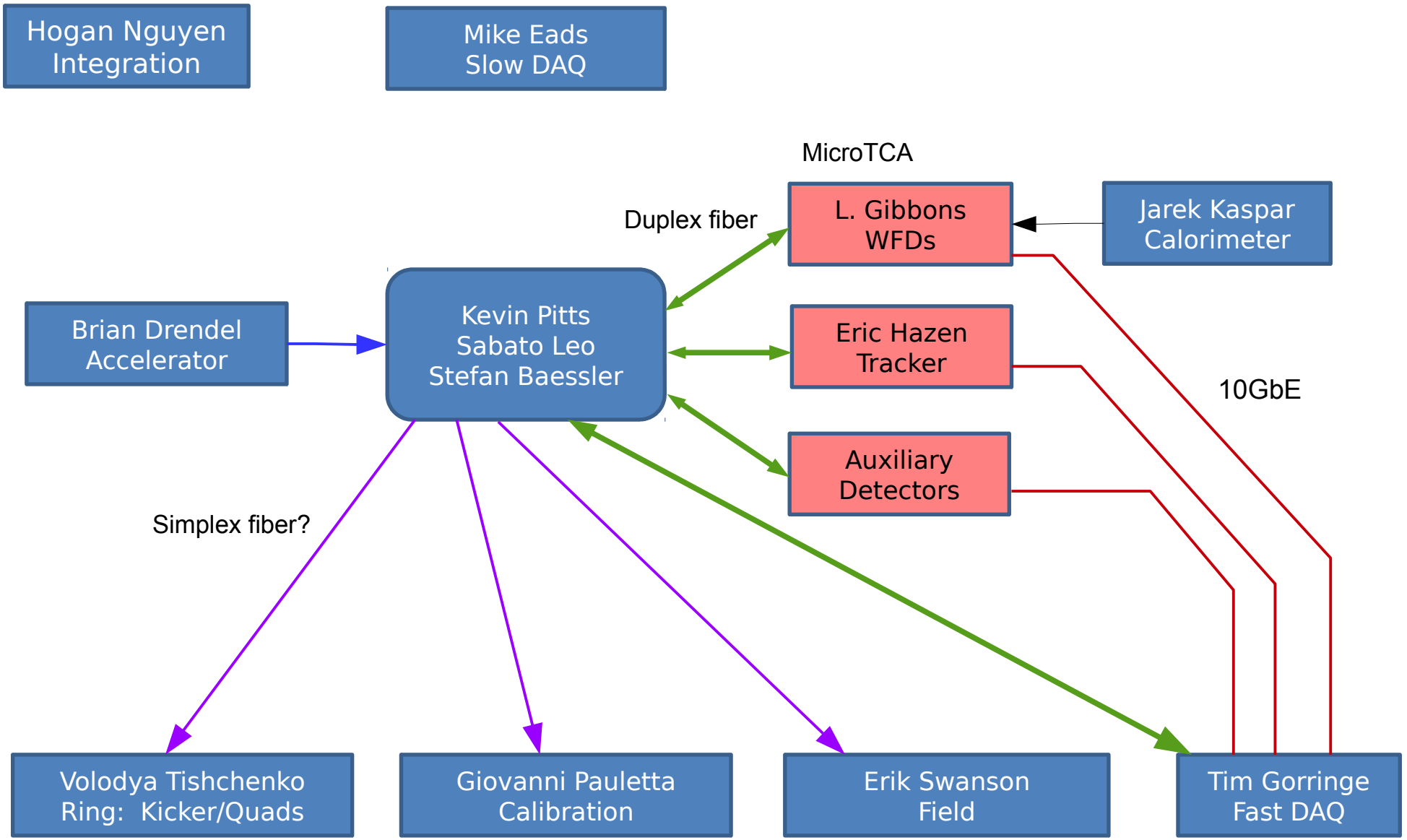

Proposed g-2 clock distribution

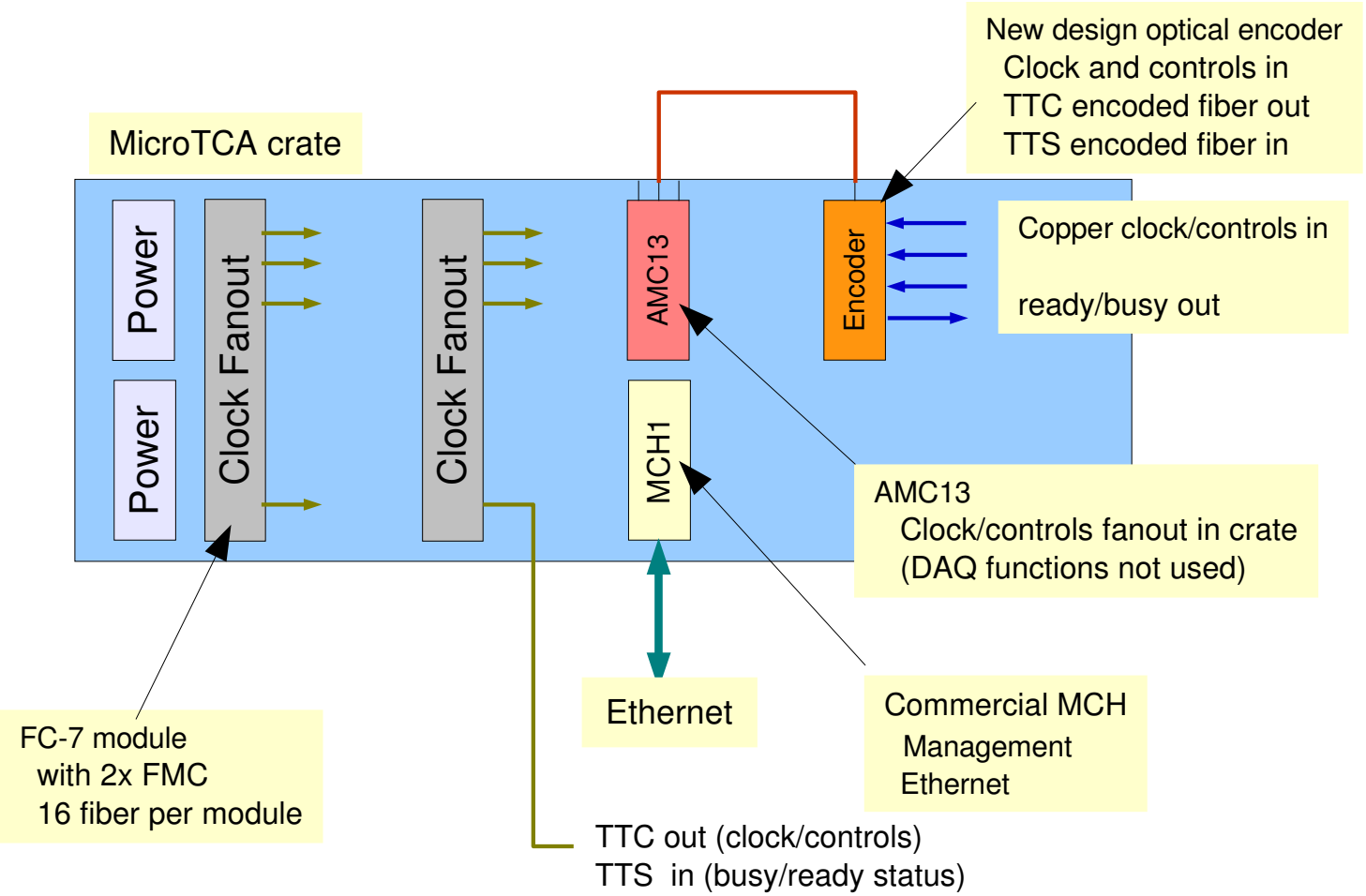

Optical Rx for non-uTCA

- Existing CMS design could be used
- “TTTT” board as shown below

Quad SFP optics

Clock input
Clock output

Four NIM outputs

Four NIM inputs

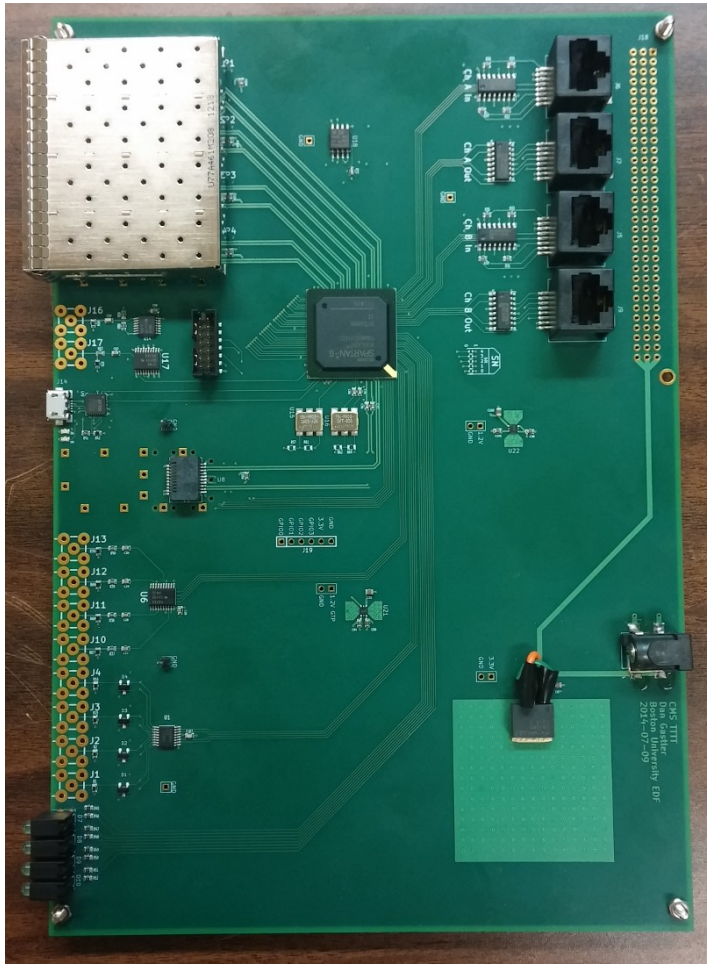

VME 6U form factor
(no VME interface, only power)

Alternate 5V power input

Could mount in a box
For stand-alone operation

TTTT Status

- Hardware design largely tested
- A couple of small layout changes needed plus some relatively simple firmware
- Much cheaper than a new design estimate $500 per board assembled